Cultivable microbial ecology and aromatic profile of “mothers” for Vino cotto wine production

Cultivable microbial ecology and aromatic profile of "mothers" for Vino cotto wine production

Noemi Battistelli [a,1], Giorgia Perpetuini [a,1], Andrea Piva [a], Alessia Pepe [a], Rossana Sidari [b], Yves Wache [c,d,e], Rosanna Tofalo [a,*]

[a] Faculty of BioScience and Technology for Food, Agriculture and Environment, University of Teramo, Via R. Balzarini, 1, 64100 Teramo, Italy
[b] Department of Agraria, Mediterranean University of Reggio Calabria, Loc. Feo di Vito, I-89122 Reggio Calabria, Italy
[c] Tropical Fermentation Network, France
[d] International Joint Laboratory, Tropical Bioresources & Biotechnology, Univ. Bourgogne Franche-Comt´e, AgroSup Dijon, PAM UMR A 02.102 and School of
Biotechnology and Food Technology, Hanoi University of Science and Technology, Dijon, France
[e] School of Food Science and Technology, Faculty of Science and Technology, Thammasat University, 12120, Thailand

* Corresponding author.
E-mail address: rtofalo@unite.it (R. Tofalo).

1 These authors equally contributed to this work.

A B S T R A C T

The aim of the present study was to assess the cultivable microbiota of “mothers” of *Vino cotto* collected from production of different years 1890, 1895, 1920, 1975, 2008. A total of 73 yeasts and 81 bacteria were isolated. *Starmerella lactis-condensi*, *Starmerella bacillaris*, *Hanseniaspora uvarum*, *Saccharomyces cerevisiae*, *Hanseniaspora guillermondi* and *Metschnikowia pulcherrima* were identified. Bacteria isolates belonged to lactic acid bacteria (*Lactiplantibacillus plantarum* and *Pediococcus pentosaceus*) and acetic acid bacteria (*Gluconobacter oxydans*). Remarkable biodiversity was observed for *Starm. bacillaris*, as well as *L. plantarum* and *G. oxydans*. Organic acids and volatile compounds were also determined. Malic and succinic acids were the main ones with values ranging from 8.49 g/L to 11.76 g/L and from 4.15 g/L to 7.73 g/L respectively, while citric acid was present at low concentrations (<0.2 g/L) in all samples. Esters and higher alcohols were the main volatile compounds detected followed by alkanes. This study permits to better understand the microbial communities associated to this product and could be considered a starting point for the definition of tailored starter cultures to improve the quality of *Vino cotto* preserving its typical traits.

Keywords:

Osmotolerant yeast

Lactic acid bacteria

Acetic acid bacteria

Aroma compounds

Vino cotto

1. Introduction

Vino cotto (cooked wine) is a typical sweet wine produced in Abruzzo and Marche regions. It was inserted in the national list of traditional food products for Marche and Abruzzo regions in 2000 and 2003, respectively, and can be marketed as traditional agrifood product (Repubblica Italiana 2000; 2003). It is produced according to traditional procedures using different grape cultivars including Trebbiano, Passerina, Montonico, Moscato, Montepulciano and Sangiovese. The must is heated and concentrated to 30–70% in copper boilers. To start the alcoholic fermentation fresh must can be added so the indigenous yeasts can drive the fermentation process which proceeds very slowly for more than a month at room temperature because of the high concentration of sugar and other naturally occurring substances such as acids, polyphenols, metal ions, and the formation of Maillard reaction products (Piva et al., 2008). Once the fermentation ends Vino cotto is transferred in wooden barrels. In the bottom of barrels, the must/wine which settles over the years and gives the characteristic aroma and flavour of Vino cotto is present (Tofalo et al., 2009). This mixture is called by local producers “mother” of Vino cotto. Therefore, each barrel is a unique niche where a peculiar microbiota can develop. Very few studies have been carried out to study the microorganisms hosted by “mother” of Vino cotto and Vino cotto wine. It represents a very stressing environment since microorganisms are exposed to osmotic stress which cause the loss of intracellular water and the collapse of cytoskeleton (Hohmann, 2002). In general, osmotolerant yeasts could grow facing the stressing conditions since they are able to retain the ability to synthesize glycerol as a compatible solute or osmoregulator, and some yeasts even have active glycerol uptake pumps (Hohmann, 2002). In a previous study Tofalo et al. (2009) isolated, identified and characterized the predominant indigenous yeast species during Vino cotto production. Only four species were identified: *Saccharomyces cerevisiae*, *Candida apicola*, *Starmerella bacillaris* (syn. *Candida zemplinina*) and *Zygosaccharomyces bailii*. All the species showed osmotolerant traits being able to develop in presence of high concentration of glucose in a strain dependent way.

No data are available concerning bacteria. However, some bacterial group can also develop. In particular, lactic acid bacteria (LAB) and acetic acid bacteria (AAB).

LAB are able to face different stress conditions since they Harbour specific genes and they have evolved adaptive networks such as the so called Global Regulatory Systems. It controls the simultaneous expression of a large number of genes in response to a variety of environmental stress factors (Spano & Massa, 2006). Moreover, they were isolated in “Shanxi aged vinegar”, a traditional Chinese vinegar (Wu, Ma, Zhang, & Chen, 2012).

AAB are found on stressing substrates containing sugars and/or alcohol, such as fruit juice, wine, cider, beer, and vinegar (Mas, Torija, García-Parrilla, & Troncoso, 2014; Calabrò, Fazzino, Sidari,

& Zema, 2020) and they are able to survive in Traditional Balsamic Vinegar, another Italian traditional product made with cooked grape must (Solieri, Landi, De Vero, & Giudici, 2006).

In light of the above, the aim of the present work was to determine the cultivable microorganisms associated with "mothers" of Vino cotto collected from barrels of different years (1890, 1920, 1926, 1980, 2008). Specifically, AAB, LAB and yeasts were enumerated and isolated. Isolates identification was performed as well as their genotypic grouping in order to verify if a core microbiota was conserved over years. Moreover, samples were characterized for organic acids and polyphenols content and volatile profile.

2. 2.Materials and methods

2.1. Samples origin

Five barrels of different years (1890, 1895, 1920, 1975, 2008) containing "mothers" of Vino cotto were analyzed. Samples were named as follow: V1890, V1895, V1920, V1975, V2008. Samples were obtained from a local winery of Abruzzo region, collected in sterile tubes and transported to the microbiological laboratory of the Faculty of BioScience and Technology for Food, Agriculture and Environment (University of Teramo) and analyzed.

2.2. Microbial counts

Samples were diluted in physiological solution (NaCl 0.85% w/v) and serially diluted. Cell suspensions were spread-plated and incubated as follows: yeasts on YPD agar (Yeast Extract 10 g/L, Peptone 20 g/L, Dextrose 20 g/L, Agar 18 g/L) and on Wallerstein Laboratory Nutrient Agar (WLN) (Oxoid, Milan, Italy) at 28 ◦C for 48 h; LAB on DeMan-Rogosa-Sharp Agar (MRS) (Oxoid) with 100 ppm cycloheximide at 30 ◦C for 48 h in microaerophilic conditions; AAB on GYC medium (Glucose 100 g/L, Yeast Extract 10 g/L, Calcium Carbonate 20 g/L, Agar 1.5 g/L) – a common medium useful to isolate AAB from sources rich in sugar – at 30 ◦C for 48 h in aerobic conditions (Gullo, Caggia, De Vero, & Giudici, 2006). Cell counts were performed in duplicate.

The random colony selection from the highest dilution plates allowed us to collect the most frequent species present in each sample, as reported by Tofalo et al. (2009), and Solieri et al. (2006). Isolates were purified and stored in liquid cultures with glycerol (20% v/v) (Sigma Aldrich, Milan, Italy) at -80 ◦C. Strains belong to the Culture Collection of the Faculty of BioScience and Technology for Food, Agriculture and Environment (University of Teramo).

2.3. Yeasts identification and typing

Yeast cells were grown aerobically in YPD at 28 ◦C. DNA was extracted according to Aa, Townsend, Adams, Nielsen, and Taylor (2006). The 5.8S internal transcribed spacer (ITS) rRNA

region was amplified in a Bio-Rad thermocycler (MyCycler, Bio-Rad Laboratories, Milan, Italy) using primers ITS1 (5′ TCCGTAGGTGAACCTGCGG 3′) and ITS4 (5′ TCCTCCGCTTATTGATATGC 3′). The PCR product was digested with the restriction enzymes CfoI, HaeIII and HinfI as previously described (Esteve-Zarzoso, Belloch, Uruburu, & Querol, 1999; Tofalo et al., 2009). In order to have a confirmation of the species, sequencing of the D1/D2 domains of 26S rRNA gene was conducted using primers NL1 (5′ GCATATCAATAAGCGGAGGAAAAG 3′) and NL4 (5′ GGTCCGTGTTTCAAGACGG 3′) (Kurtzman & Robnett, 1998). The PCR product was purified by ExoSAP-IT (Thermofisher, Milan, Italy) according to manufacturer's instructions and delivered to BMR Genomics (Padua University, Padua, Italy) for sequencing. The obtained sequenze were compared to those available in the GenBank database (http://www.ncbi.nml.nih.gov/BLAST) and those of the Ribosomal Database Project (http://rdp.cme.msu.edu/index.jsp) to determine the closest known relative species on the basis of 26S rRNA gene homology (Altschul et al., 1997).

Strains were typed by RAPD-PCR with primer M13 (5′ GAGGGTGGCGGTTCT 3′) as previously described (Tofalo et al., 2009). Fingerprinting II InformatixTM software program (Bio-Rad) was employed for conversion and normalization of the RAPD-PCR patterns. Similarities among profiles were calculated by clustering the Pearson's r correlation matrix using the Unweighted Pair-Group Method with Average (UPGMA) algorithm.

2.4. Bacteria identification and typing

DNA was extracted using InstaGene Matrix (Bio-Rad) according to manufacturer's instructions. Bacterial isolates were identified by 16S rRNA gene sequencing. PCR reactions were performed as described by Bringel et al. (2005) using Lac16S-for (5′ AATGAGAGTTTGATCCTGGCT 3′) and Lac16S-rev (5′ GAGGTGATCCAGCCGCAGGTT 3′) primer set. PCR products were purified and sent to BMR Genomics for sequence analysis. *Lactiplantibacillus plantarum*, *L. pentosus*, and *L. paraplantarum* were differentiated by multiplex PCR according to Torriani, Felis, & Dellalglio (2001). Molecular typing was performed by M13 RAPD-PCR as previously described.

2.5. Organic acids analysis

Organic acids of "mothers" of Vino cotto samples were detected by HPLC according to Tašev, Stefova, and Ivanova (2016) and Piva et al. (2008). All chemicals were of analytical reagent grade and supplied by Sigma Aldrich. To separate organic acids from other components, solid phase extraction (SPE) was performed. Samples were diluted 1:10 and filtered, then extracted with SPE using Supelclean LC-18 SPE 500 mg cartridges (Sigma Aldrich). The cartridges were conditioned

with 2 mL methanol and 2 mL water. Then, 500 μL of samples were loaded on the cartridges. Elution was performed with two portions (500 μL each) of buffered water at pH 2.1. Finally, 10 μL of the eluate was injected into the HPLC system for analysis. Organic acids (citric acid, tartaric acid, malic acid, succinic acid, lactic acid and acetic acid – Sigma Aldrich) were used to create the standard curve. The detector was an HPLC 200 series (Perkin Elmer, Monza, Italy) connected to a UV VIS detector at 210 nm. ROA Organic Acid H + column (Phenomenex, Bologna, Italy) was used. All determinations were performed isocratically with a flow rate of 0.7 mL/min at 65 °C using H_2SO_4 solution 0.009 N as mobile phase. Analyses were performed in triplicate.

2.6. Volatile compounds

Volatile compounds were analyzed using gas chromatography/mass spectrometry (GC–MS) as described by Tofalo et al. (2016). Analyses were performed using a Clarus SQ8S chromatography/mass (GC–MS) spectrometry (Perkin Elmer, Boston, MA). The column used was a capillary GC column (30 m × 0.25 mm i.d. 0.25 μm film thickness) coated with polyethyleneglycol (film thickness 1.2 μm), as stationary phase. A carboxen–polydimethylsiloxane-coated fiber (85 μm) was used (Sigma-Aldrich, St. Louis, MO, USA). Equilibration and adsorption steps were performed stirring the samples for 30 min at 40 °C. The fiber was placed in the injector (T = 250 °C) for 15 min and the following program was applied: 50 °C for 2 min; first ramp, 1 °C min to 65 °C; second ramp, 10 °C min to 150 °C (10 min hold); third ramp 10 °C min to 200 °C (1 min hold). Volatile compounds were identified comparing mass spectra of compounds with those contained in the available database (NIST version 2005). All determinations were performed in triplicate.

2.7. Statistical analysis

Organic acids and volatile compounds results were expressed as mean value ± standard deviation. The Friedman's test was used and $p < 0.01$ was used as criterion for statistical significance.

Principal component analysis (PCA) based on the main volatile compounds, organic acids and samples was performed using the software XLStat 2014 (Addinsoft, New York, NY, United States).

3. Results and discussion

3.1. Microbial counts

This study evaluated viable microbial communities hosted by "mothers" of Vino cotto of different years. Yeasts were detected in all samples with values ranging from 2.7 Log CFU/mL (V1890) to 3.5 Log CFU/mL (V2008) (Fig. 1). These results are similar to other studies on high content sugary foods (i.e. honey and manna), which are recognized as a stressful environment, and allow the

growth of osmotolerant microorganisms (Snowdon & Cliver, 1996; Fe´as, Pires, Iglesias, & Estevinho, 2010; Sinacori et al., 2014; Guarcello et al., 2019). Yeast counts increased over time showing the highest values in samples obtained from the newest barrels. LAB showed a similar trend. They were present only in "mothers" of Vino cotto collected from the most recent barrels ranging from 2 Log CFU/mL (V1980) to 6.12 Log CFU/mL (V2008). In the other samples they showed values of microbial count less than the limit of detection. An opposite tendency was observed for AAB. In fact, they were detected in the oldest 3 samples with values from 4 Log CFU/mL (V1890) to 2 Log CFU/mL (V1920), while were absent in "mothers" of Vino cotto obtained from the newest barrels (V1975, V2008) (Fig. 1).

Therefore, samples from barrels of V1890, V1895 and V1920 were characterized by the presence of yeasts and AAB, while those of V1975 and V2008 by yeasts and LAB. The different occurrence of microbial groups could influence fermentation kinetics resulting in different organoleptic characteristics which make this product unique and with traits which are different from year to year. Probably, the occurrence of AAB is influenced by oxygen availability, which is higher in the oldest barrels.

No data are available concerning the microbial groups characterizing "mothers" of Vino cotto. Tofalo et al. (2009) studied the yeast population occurring during the different steps of Vino cotto production. At the beginning of fermentation, after the addition of fresh must, yeast counts were 6.3 Log CFU/mL, and a maximum number of 8.2 Log CFU/mL was reached during fermentation, while at the late stages of the process the viable cells decreased to 5.1 Log CFU/mL.

However, the same yeast species were detected by other authors in similar products obtained by cooked must, such as balsamic vinegars (TBV) (Solieri et al., 2006; Gullo et al., 2006). The presence of AAB is associated to their ability to resist to acid environment (pH 2.5 – 3.5).

Moreover, they are able to grow at elevated sugar concentration characterizing this product (Gullo et al., 2006). LAB are able to tolerate different stressing conditions thanks to their genetic, and can promote a soft taste by moderating the irritating sour smell (Chen, Li, Qu, & Chen, 2009).

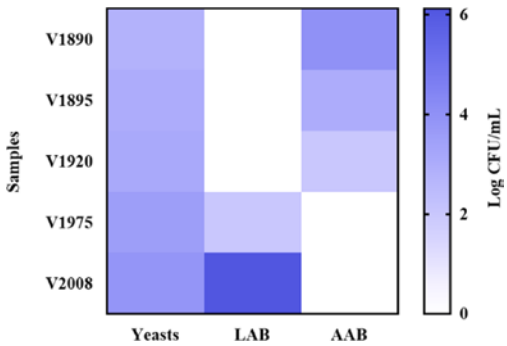

Fig. 1. Viable count of yeasts, LAB and AAB.

3.2. Yeast identification and typing

Colonies were selected on WLN and YPD media according to colony shape, colour and surface features. To attribute the species, PCR-RFLP and sequencing of D1/D2 domine of 26S rRNA gene were performer and compared with those available in the EMBL nucleotide sequence database. (Table S1). All the sequences obtained displayed similarità values ranging from 99 to 100%.

As regards yeasts, a total of 73 colonies were isolated. *Starmerella lactis-condensi* (30), *Starm. bacillaris* (16), *Hanseniaspora uvarum* (13), *Saccharomyces cerevisiae* (7), *Hanseniaspora guillermondi* (5) and *Metschnikowia pulcherrima* (2) species were identified (Fig. 2). *Starm.lactis-condensi*, which was present in all samples, is a relative of Starmerella stellata and Starm. bacillaris (syn. Candida zemplinina). The yeasts belonging to these species are osmotolerant and able to grow also on 50% w/w glucose, a typical characteristic of Starmerella clade (Kurtzman, Fell & Boekhout, 2011). Osmotolerant yeasts are characterized by their ability to survive high osmotic pressure in the environment, caused by the presence of sugars or salts. The adaptation to a low water activity (aw) environment is a species and strain specific trait and it is generally based on modification in plasma membrane composition, activity of various ion transporters or redox metabolism (Hohmann, 2002; Thomè, 2007). Starm lactis-condensi is nutritionally specialized and has been previously found in sugar syrups, manna and TBV. Probably, it could be brought on fruits by insects, like bees and wasps, which could be a vector for their spreading (Lievens et al., 2015; Solieri & Giudici, 2008; Guarcello et al., 2019). The occurrence of *Starm. bacillaris* (syn. *C. zemplinina*) in “mothers” of Vino cotto is not surprisingly, since Tofalo et al. (2009) found this species throughout all the fermentation process of Vino cotto. Its presence is related to its osmotolerance, in fact it grows like or better than S. cerevisiae in media with high sugar contents (Tofalo et al., 2009). Several ecology studies reported the occurrence of *Starm. bacillaris* in both white and red wines from different origin as well as in botrytized grape (Masneuf-Pomarede et al., 2015). When it is used in mixed fermentation with S. cerevisiae, it produces wine with reduced ethanol content and an increased concentration of glycerol (Englezos et al., 2015). This trait is interesting since the global warming and the evolution of viticulture practices led to grape must with increased sugar content and thus increased potential ethanol content (Englezos et al., 2015). *Starm. bacillaris* presents other interesting features such as the fructophilic character (Magyar & Tóth, 2011; Tofalo et al., 2012; Englezos et al., 2015), and the antifungal activity against *Botrytis cinerea* (Lemos et al., 2016).

The ascomycetous yeast *Metschnikowia* dominates most nectar microbial communities and it is often transferred from insects or birds, from flower to flower or from flower to fruit (Lievens et al., 2015). Sugar composition and concentration is crucial for its development, but this species is able to

exploit a diversity of resources efficiently, which help it to survive in nectars (Herrera, Pozo, & Bazaga, 2012). In high sugary foods, such as high sugar grape musts, wines produced with dried or botrytized grapes, honey or manna, non-*Saccharomyces* yeasts are usually dominant (Sinacori et al., 2014; De Filippis et al., 2019). *S. cerevisiae* is not recognized as osmotolerant yeast, but its survival is a strain specific characteristic, and it has also been previously isolated in Vino cotto and TBV (Tofalo et al., 2009; Solieri & Giudici, 2009). In this study, a total of 7 isolates of *S. cerevisiae* have been found in the "mothers" of Vino cotto of the following years V1890, V1920, V2008.

H. uvarum was isolated from V1920, V1975 and V2008 samples. It is usually predominant in the early stages of wine fermentation or fruit juices, and it can occur also during middle and late phases (Kurtzman et al., 2011). Some strains previously showed fructophilic character and relevant glycerol production (De Benedictis, Bleve, Grieco, Tristezza, & Tufariello, 2011). It has been found in sweet wines such as passito wines (De Filippis et al., 2019) or pulque, an alcoholic beverage from agave (Steinkraus, 2002).

Repeatability of RAPD-PCR fingerprints was determined by triplicate loading of independent triplicate reaction mixtures prepared with the same strain and a limited variability in the number and length of the resulting bands. The reproducibility of PCR assays and running conditions was higher than 90%. Banding patterns with a level of similarità higher than 90% was considered as a biotype. UPGMA dendrogram is shown in Fig. 3. RAPD-PCR resulted in a coherent classification at the species level. A single biotype was found for *H. uvarum*, *H. guillermonndi*, *M. pulcherrima*, *Starm. lactis-condensi* and *S. cerevisiae* strains, while two biotypes for *Starm bacillaris* strains. These results suggested strain adaptability to this niche along the year of production sampled. This low RAPD-PCR diversity can be explained by the supposed prevalence of a small number of dominant species or "core" strains, selected by the stressful conditions imposed by this peculiar environment, similarly to what happens in other ecological niches (Biolcati, Andrighetto, Bottero, & Dalmasso, 2020).

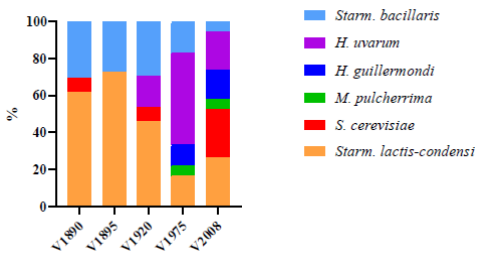

Fig. 2. Percentage of yeasts species.

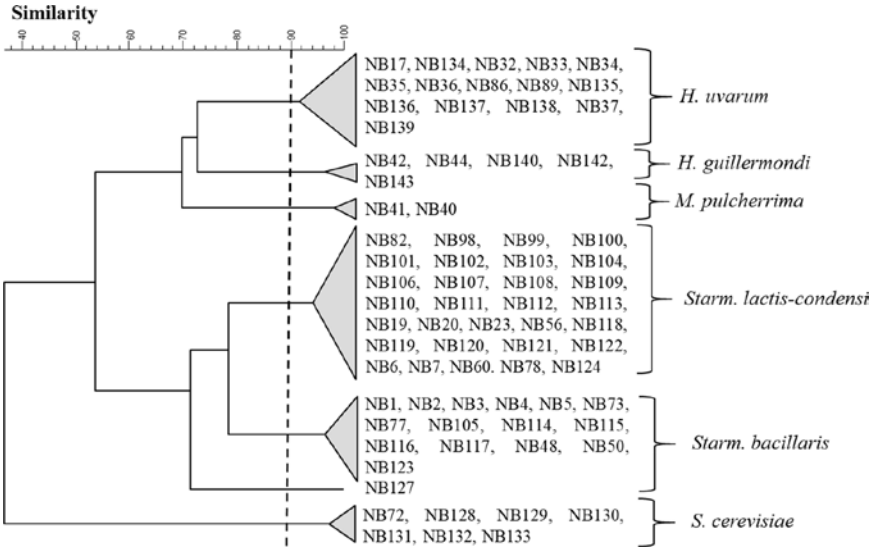

Fig. 3. RAPD-PCR cluster analysis of yeasts isolates. Unweighted pair group method with arithmetic mean (UPGMA) dendrogram derived from comparison of the RAPD-PCR patterns of the yeast isolates obtained with primer M13.

3.3. Bacterial identification and typing

A total of 81 colonies were isolated and only 3 species were identified (Table S2). In samples V1890, V1895 and V1920 only *Gluconobacter oxydans* (36) was found. In samples V1975 and V2008 were isolated LAB belonging to *Pediococcus pentosaceus* (12) and *L. plantarum* (33) species (Fig. 4). The confirmation of *L. plantarum* species was conducted after amplification of recA gene which resulted in the presence of the band at 318 bp for all the strains.

Generally, *G. oxydans* can be found in sugary niches such as flowers and fruits (De Muynck et al., 2007) and can be isolated from honey, cider, beer, wine and vinegar. The presence of *G. oxydans* in the “mothers” of Vino cotto is probably related to its metabolic traits: they can obtain energy from sugars efficiently via pentose phosphate pathway and glucose oxidation lead to the production of gluconic acid and can improve the flavour of the final product (Macauley, McNeil, & Harvey, 2001; De Muynck et al., 2007).

Lactiplantibacillus plantarum and *P. pentosaceus* isolates were found in the two most recent samples, V1975 and V2008. LAB are generally highly demanding regarding nutrients, and sugar-rich environments can inhibit their growth. Some fructophilic LAB have been found: they are able to develop in highly sugary niches such as flowers, nectar and fruits, in the digestive tracts of pollinators, or in fermented foods derived from fruits (Endo & Okada, 2008; Endo, Futagawa, & Dicks, 2009). Recently, some evidence about the frucophilic attitude of a *L. plantarum* strain isolated from honeydew have been described (Gustaw, Michalak, Polak-Berecka, & Wa´sko, 2018). It is likely that the strains found in our samples derived from the grapes and were able to adapt themselves to the osmophilic environment they found, being able to survive.

P. pentosaceus is generally isolated in wine environment (must, alcoholic/malolactic fermentation, aging and conservation). It can grow in wines that are considered microbiologically stable, and its presence does not

always lead to spoilage, but can be useful for the malolactic fermentation. New findings have suggested potential uses for *Pediococcus* spp. in winemaking but have also underlined the necessity to further study the factors that influence its growth and spoilage potential (for a review see Wade, Strickland, Osborne, & Edwards, 2019).

All bacteria were processed by RAPD-PCR analysis to differenziate them at strain level. A single biotype was obtained for *P. pentosaceus* strains (data not shown). On the contrary, 6 biotypes for *G. oxydans* were detected. A relationship with sample origin was found (Fig. 5). V1890 sample showed 3 different profiles, V1895 sample only one, while V1920 sample 2 biotypes. Ten biotypes were observed for *L. plantarum* and 6 of them contained only a strain. Also, in this case strains clistere on the basis of their origin. In particular, for V1975 sample 5 biotypes were found, each of them with a single strain. For V2008 samples 5 clusters were identified and only one contained a strain (Fig. 6). This association of strains with their origin could be explained by the existence of metabolic interdependencies between strains. It is possible that, specific strains may have been selected and be prevalent with respect to the remaining microbial community.

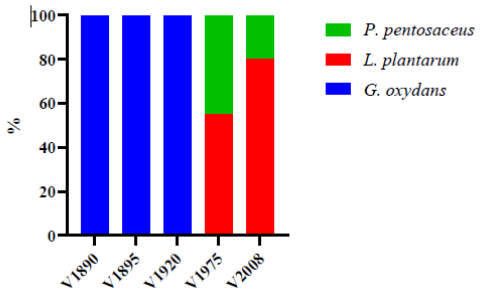

Fig. 4. Percentage of bacteria species.

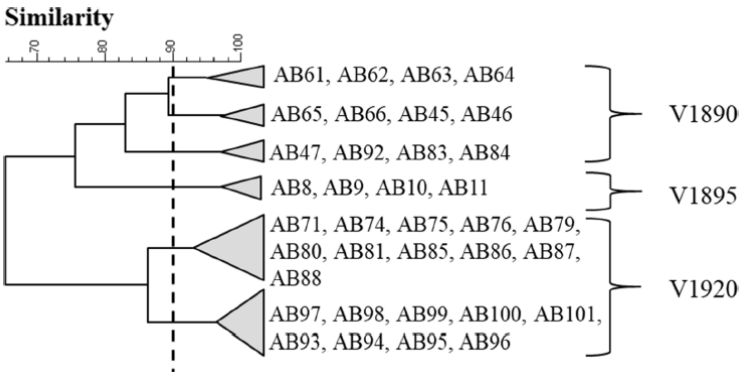

Fig. 5. RAPD-PCR cluster analysis of G. oxydans isolates. Unweighted pair group method with arithmetic mean (UPGMA) dendrogram derived from comparison of the RAPD-PCR patterns of the isolates obtained with primer M13.

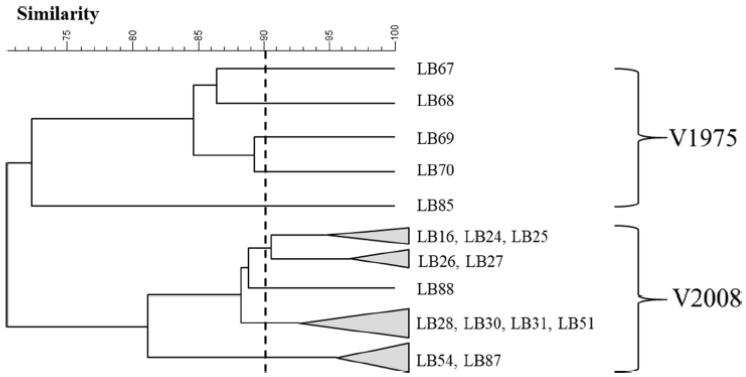

Fig. 6. RAPD-PCR cluster analysis of L. plantarum isolates. Unweighted pair group method with arithmetic mean (UPGMA) dendrogram derived from comparison of the RAPD-PCR patterns of the isolates obtained with primer M13.

3.4. Organic acids content

Organic acids are produced through hydrolysis, biochemical metabolism and microbial actions during the fermentation process. Citric, tartaric, malic, succinic, lactic and acetic acids were detected in all samples (Table 1). Malic and succinic acids were the main ones with values ranging from 8.49 g/L (V1975) to 11.76 g/L (V2008) and from 4.15 g/L (V1895) to 7.73 g/L (V2008), respectively. Citric acid was present at low concentrations around 0.3 g/L in all samples, while tartaric, and acetic acids had values of about 2 g/L. Lactic acid was detected only in small amounts. Organic acids have different origins, mainly grapes and microbial metabolism. The presence of succinic acid is related to yeast metabolism and the high concentration detected is in agreement with cell counts. Acetic acid and lactic acid are mainly produced during alcohol and malolactic fermentations, and small amounts are also produced during thermal treatment of must due to sugar degradation (Xia, Zhang, Duan, Zhang, & Wang, 2020). Malic, citric, and tartaric acids mainly derive from grapes (Xia et al., 2020). They could all react with sugars, through a condensation reaction, follone by CO_2 production, to give brown compounds (Lewis & Quackenbush, 1949). The same organic acids were detected also in Vino cotto samples by other authors with similar amounts (Piva et al., 2008; Di Mattia, Sacchetti, Seghetti, Piva, & Mastrocola, 2007) as well as in products obtained in a similar way such as vinegars. Similar amounts of malic, acetic, and citric acids were detected in botrytized wines which are characterized by high sugar concentration (Kiss & Sass-Kiss, 2005).

3.5. Determination of volatile profile

The volatile metabolites are shown in Table 2. Aroma compounds belonged to seven different families: esters, higher alcohols, aldehydes, alkanes, and acetals. Esters and higher alcohols were the main compounds detected.

Esters showed total amounts ranging from 32.80 mg/L (V1895) to 96.17 mg/L (V1920). Ethyl esters of fatty acids were the most represented group. Their concentration depends on several factors including yeast species, fermentation temperature, aeration degree, and sugar content (Schreirer, 1980) and have very pleasant fruits, honey, and sweet scents which contribute to the aromatic finesse of wines (Ugliano & Henschke, 2009). The main esters were butanedioic acid, diethyl ester (diethyl succinate) and ethyl acetate with values varying from 4.63 mg/L (V1980) to 35.64 mg/L (V1920) and from 8.69 mg/L (V2008) to 13.78 mg/L (V1920), respectively. Butanedioic acid, diethyl ester is formed through the esterification of succinic acid and is associated to fruity melon and cooked apple notes. This compound occurs naturally in apples, grapes, and cocoa and its odor threshold has been set at 1.2 mg/L (Peinado, Moreno, Bueno, Moreno, & Mauricio, 2004). Its concentration increases during wine storage and aging (Cort´es-Di´eguez, Rodriguez-Solana, Domínguez, & Díaz, 2015). Butanedioic acid, diethyl ester was also observed to increase in sweet wines such as Sherry type wines (Moreno-García, Raposo, & Moreno, 2013) and natural sweet wines (Issa-Issa et al., 2019). Ethyl acetate is formed by the action of yeasts during fermentation, and by the action of AAB during ageing (Nogueira & Nascimento, 1999). Ethyl acetate is perceived as the odour of nail polish remover when occurs above the sensory threshold (12 mg/L); at low amounts it confers fruity aroma properties and adds complexity to wine.

Higher alcohols represent the other important group of volatiles identified in wine. The group is composed of aliphatic and aromatic alcohols, most of which are products of yeast fermentation (Kotseridis & Baumes, 2000). Their concentrations ranged from 17.96 mg/L (V1890) to 49.47 mg/L (V1920) and the main compounds detected were 1-butanol, 3-methyl and phenylethyl alcohol with values varying from 7.77 mg/L (V1890) to 27.63 mg/L (V1920) and from 4.49 mg/L (V2008) to 12.11 mg/L (V1920), respectively. These higher alcohols are positively related to the vegetal/pepper note of aged red wines and negatively related to the intensity of the toasted and woody-old attributes (Aznar, L´opez, Cacho, & Ferreira, 2003). Recently have been also proved the sensory importance of the pair 1-butanol, 3-methyl and isoamyl alcohol on wine aroma perception and that the effects of the alcohols are extremely dependent on the aromatic context. In poor aromatic contexts, lacking of specific aroma nuances other than those of the wine aroma base, the sensory effects are negligible confirming the aroma buffering effects of such wine aroma base. Only in contexts in which aroma notes are clearly perceived, the effects become clearly noticeable (De-la-Fuente-Blanco, S´aenz-Navajas, & Ferreira, 2016).

Furfural and its derivatives were the main aldehydes detected. Their occurrence in “mothers” of Vino cotto is probably related to the production process. In fact, they are considered as some of the main products of the browning process (and markers of a heat treatment); and thus, they can play a role in delivering a dried and cooked fruit flavor (Loizzo et al., 2013).

Among acetals 1,3-dioxolane, 2,4,5-trimethyl was the main compound detected and its occurrence has been already described in “Zaoheibao” wine (Duan, Liu, Lv, Wu, & Wang, 2020).

Alkanes were well represented too, probably due to the coking process of the must. 3,3′ -bi-p-menthane was the most abundant with values ranging from 15.78 mg/L (V1980) to 29.42 mg/L (V1890). It is associated to

fennel and peppermint odor (Shigeto, Wada, & Kumazawa, 2020), and thus, could contribute to the balsamic notes of Vino cotto.

Table 1 Organic acids detected in “mothers” of Vino cotto. Data are expressed as g/L. $p < 0.01$.

Samples	Citric acid	Tartaric acid	Malic acid	Succinic acid	Lactic acid	Acetic acid
V1890	0.38 ± 0.03	1.69 ± 0.08	9.82 ± 0.31	6.54 ± 0.23	0.09 ± 0.02	2.26 ± 0.03
V1895	0.29 ± 0.04	1.88 ± 0.04	11.83 ± 0.45	4.15 ± 0.08	0.79 ± 0.06	2.97 ± 0.12
V1920	0.45 ± 0.05	1.03 ± 0.12	9.63 ± 0.62	7.41 ± 0.21	0.53 ± 0.11	2.99 ± 1.12
V1975	0.37 ± 0.02	1.65 ± 0.05	8.49 ± 0.43	5.72 ± 0.62	0.04 ± 0.01	2.41 ± 0.29
V2008	0.44 ± 0.04	1.97 ± 0.05	11.76 ± 0.67	7.73 ± 0.34	0.12 ± 0.03	2.54 ± 0.23

Table 2 Volatile compounds found in tested samples expressed as mg/L. $p < 0.01$.

Compounds	Samples				
	V1890	V1895	V1920	V1980	V2008
Esters					
10-Bromodecanoic acid, ethyl ester			0.27 ± 0.01	0.12 ± 0.03	
1-Butanol, 2-methyl-, acetate	0.12 ± 0.02	0.19 ± 0.01	0.30 ± 0.03		0.20 ± 0.04
1-Butanol, 3-methyl-, acetate	0.61 ± 0.03	1.29 ± 0.21	1.70 ± 0.11	0.66 ± 0.05	1.41 ± 0.04
2,3-Diethoxy-propionic acid, ethyl ester		0.11 ± 0.01			
2-Butenoic acid, 3-methyl-, 2-phenylethyl ester					
2-Propenoic acid, 1-methylundecyl ester			0.27 ± 0.05		
3-Butyl-4-nitro-penz-4-enoic acid, methyl ester					
Acetic acid, 2-phenylethyl ester	0.41 ± 0.04			0.47 ± 0.03	0.40 ± 0.07
Acetic acid, hydroxy-, ethyl ester					
Benzeneacetic acid, ethyl ester	0.32 ± 0.05	0.19 ± 0.03			0.29 ± 0.04
Butanedioic acid, diethyl ester	12.66 ± 0.75	13.74 ± 0.40	35.64 ± 0.56	4.63 ± 0.12	12.06 ± 0.28
Butanedioic acid, ethyl 3-methylbutyl ester					0.14 ± 0.01
Butanedioic acid, hydroxy-, diethyl ester, (+)-					
Butanoic acid, 3-methyl-, ethyl ester	0.07 ± 0.03	0.16 ± 0.02			
Butanoic acid, ethyl ester	0.05 ± 0.02	0.16 ± 0.02	0.26 ± 0.03	0.13 ± 0.04	0.13 ± 0.03
Decanoic acid, ethyl ester			14.82 ± 0.27	5.57 ± 0.26	1.01 ± 0.05
Dodecanoic acid, ethyl ester			3.00 ± 0.08	1.11 ± 0.12	0.16 ± 0.09
E-11-Hexadecenoic acid, ethyl ester					
Ethyl 9-decenoate				0.24 ± 0.02	0.09 ± 0.01
Ethyl Acetate	12.43 ± 0.21	12.39 ± 0.23	13.78 ± 0.32	12.57 ± 0.26	8.69 ± 0.04
Hexadecanoic acid, ethyl ester			1.02 ± 0.02		
Hexanoic acid, 2-methyl-, 1-methylpropyl ester				0.10 ± 0.02	
Hexanoic acid, ethyl ester	1.10 ± 0.12	0.61 ± 0.05	3.77 ± 0.24	1.92 ± 0.08	2.68 ± 0.17
Methyl 2-methylhexanoate				2.15 ± 0.19	0.11 ± 0.02
Methyl 3-methyl-pentadecanoate					0.07 ± 0.02
Nonanoic acid, ethyl ester				0.15 ± 0.03	
Octanoic acid, ethyl ester	0.92 ± 0.04	0.40 ± 0.02	13.51 ± 0.15	4.50 ± 0.12	1.20 ± 0.15
Pentanedioic acid, diethyl ester					
Pentanoic acid, 2,3-dimethyl-, methyl ester	0.74 ± 0.0.31	1.30 ± 0.03	3.64 ± 0.05	14.71 ± 0.23	6.90 ± 0.12
Pentanoic acid, 2,4-dimethyl-, methyl ester	1.83 ± 0.21				1.91 ± 0.17
Pentanoic acid, 2-methyl-, butyl ester			0.31 ± 0.09		
Pentanoic acid, 4-oxo-, ethyl ester		0.53 ± 0.03			
Propanoic acid, 2-methyl-, ethyl ester			3.76 ± 0.32		0.29 ± 0.07
Propanoic acid, 3-ethoxy-, ethyl ester		1.37 ± 0.27			
Propanoic acid, ethyl ester		0.17 ± 0.03			
Tetradecanoic acid, ethyl ester					
TOT	39.48	32.80	96.17	49.03	38.80
Higher alcohols					
(S)-3,4-Dimethylpentanol		0.08 ± 0.03	0.72 ± 0.04		
1,3-Butanediol, (S)-			0.66 ± 0.03	0.38 ± 0.05	0.32 ± 0.03
1-Butanol, 2-methyl-	1.68 ± 0.06	3.77 ± 0.11	5.95 ± 0.08	1.70 ± 0.05	1.51 ± 0.08
1-Butanol, 3-methyl-	7.77 ± 0.28	17.68 ± 0.31	27.63 ± 0.39	9.22 ± 0.26	11.30 ± 0.28
1-Propanol, 2-methyl-	0.47 ± 0.02	3.13 ± 0.04	2.10 ± 0.11	0.38 ± 0.03	0.26 ± 0.06
2,2-Dimethyl-1,3-butanediol			0.31 ± 0.02		
2,3-Butanediol	0.20 ± 0.02				
1-[(Trimethylsilyl)oxy]propan-2-ol					
Phenylethyl Alcohol	7.85 ± 0.21	2.57 ± 0.32	12.11 ± 0.21	7.00 ± 0.21	4.49 ± 0.22
3-Methyl-oxiran-2-yl)-methanol					
TOT	17.96	27.23	49.47	18.68	17.98
Aldehydes					
2-Furancarboxaldehyde, 5-methyl-	1.61 ± 0.4	0.74 ± 0.03			
6-Nonenal, 3,7-dimethyl-	0.09 ± 0.02		3.74 ± 0.06		
2-Furancarboxaldehyde, 5-methyl-					1.25 ± 0.08
5-Hydroxymethylfurfural					
Benzaldehyde		0.60 ± 0.04			
Furfural	1.13 ± 0.03	1.03 ± 0.05	5.19 ± 0.12	1.23 ± 0.03	1.18 ± 0.03
Phenol, 2,5-bis(1,1-dimethylethyl)-				0.71 ± 0.12	
Phenol, 3,5-bis(1,1-dimethylethyl)-		0.09 ± 0.01			
Propanal, 2,3-dihydroxy-, (S)-	0.03 ± 0.01		0.09 ± 0.02	0.04 ± 0.01	0.08 ± 0.02
Pyrazole-4-carboxaldehyde, 1-methyl-	0.22 ± 0.05				
TOT	3.07	2.46	9.02	1.98	2.61
Acetals					
1,3-Dioxane, 2,4-dimethyl-			0.10 ± 0.02	0.03 ± 0.01	0.02 ± 0.02
1,3-Dioxepane, 2-pentadecyl-					
1,3-Dioxolane, 2,4,5-trimethyl-	4.10 ± 0.23	4.41 ± 0.31	14.68 ± 0.52		0.47 ± 0.03
1,3-Dioxolane, 2-methoxymethyl-2,4,5-trimethyl-		0.39 ± 0.06		1.20 ± 0.09	
1,3-Dioxolane, 4,5-dimethyl-2-pentadecyl-		0.21 ± 0.05			
Pentane, 1-(1-ethoxyethoxy)-		0.22 ± 0.04			
Pentane, 1,1-diethoxy-			0.40 ± 0.02		
TOT	4.10	5.22	15.17	1.23	0.48
Alkanes					
3-(Prop-2-enoyloxy)tetradecane	0.01 ± 0.01				
3,3'-Bi-p-menthane	29.42 ± 0.15	26.91 ± 0.21	34.03 ± 0.33	15.78 ± 0.22	18.48 ± 0.35
3-Trifluoroacetoxydodecane				0.07 ± 0.04	
4-Trifluoroacetoxytetradecane				0.30 ± 0.02	0.10 ± 0.03
Butane, 1-(ethenyloxy)-3-methyl-					0.06 ± 0.02
Butane, 1,1-diethoxy-			0.40 ± 0.03		0.06 ± 0.03
Butane, 1,1-diethoxy-3-methyl-		0.13 ± 0.06			
Ethane, 1,1-diethoxy-			2.75 ± 0.14		
TOT	29.43	27.04	37.18	16.15	18.71

3.6. Principal component analysis (PCA)

PCA allowed 73.41% of the total variance to be explained by the first two principal components (Fig. 7). Based on the distribution of samples 3 groups can be identified. V1920 sample appeared far from the others for its composition in terms of citric, succinic and acetic acids, esters, aldehydes, acetals, and higher alcohols. V2008 and V1975 samples clustered together for LAB and yeast counts. V1890 and V1895 belonged to the 3rd group and were differentiated from the others for lactic acid, AAB, organic acids, and alkanes. Obtained data suggested that the aging period exerts a strong effect in the definition of “mothers” of

Vino cotto traits indicating that it should be possible to modulate the characteristics of Vino cotto using "mothers" of different years.

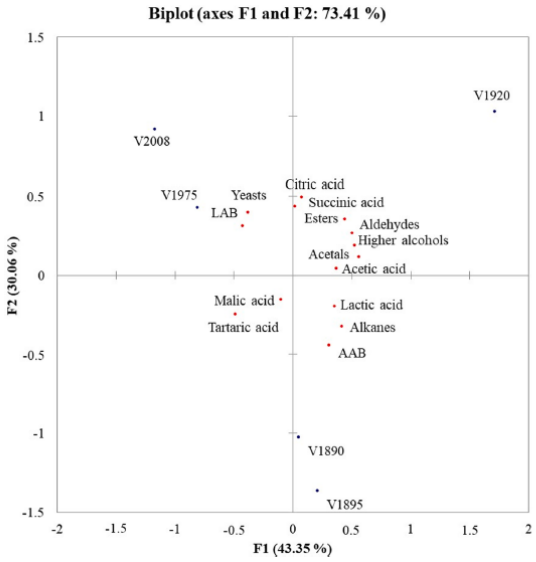

Fig. 7. PCA analysis encompassing organic acids, volatile compounds and cell counts.

4. Conclusions

"Mother" of Vino cotto is a highly selective environment. Isolated strains – especially *Starm. bacillaris*, *L. plantarum* and *G. oxydans* – showed genetic diversity. Therefore, the source of a strain/species is a key factor that affects the final genetic diversity of the individual population and different origins can favour or disfavour certain species in terms of their strain genetic diversity development. The strict relation between bacteria and origin suggests that they probably play a major role in the definition of final product characteristics. Knowing the resident population present in the barrels can improve the knowledge of this traditional product and could represent a prerequisite for the selection of strains ad hoc for Vino cotto.

Further studies on physiological and genetic characteristics of microbiota could contribute to a better understanding of microbial ecology and to improve the quality of this old traditional product maintaining a strong link with the territory.

Declaration of Competing Interest

The authors declare that they have no known competing financial interests or personal relationships that could have appeared to influence the work reported in this paper.

Acknowledgment

This research was funded by University of Teramo FARDIB-2019 and by Progetto DM61315 "Sviluppo della qualit`a delle produzioni vitivinicole abruzzesi". The authors are grateful to ''Azienda Agricola Cioti Vincenzo'' for the kind cooperation.

References

Aa, E., Townsend, J. P., Adams, R. I., Nielsen, K. M., & Taylor, J. W. (2006). Population structure and gene evolution in *Saccharomyces cerevisiae*. FEMS Yeast Res., 6, 702–715.

Altschul, S. F., Madden, T. L., Sch¨affer, A. A., Zhang, J., Zhang, Z., Miller, W., & Lipman, D. J. (1997). Gapped BLAST and PSI-BLAST: A new generation of protein database search programs. Nucleic Acids Res., 25, 3389–3402.

Aznar, M., L´opez, R., Cacho, J., & Ferreira, V. (2003). Prediction of aged red wine aroma properties from aroma chemical composition. Partial least squares regression models. J. Agric. Food. Chem., 51, 2700–2707.

Biolcati, F., Andrighetto, C., Bottero, M. T., & Dalmasso, A. (2020). Microbial characterization of an artisanal production of Robiola di Roccaverano cheese. J. Dairy Sci., 103, 4056–4067.

Bringel, F., Castioni, A., Olukoya, D. K., Felis, G. E., Torriani, S., & Dellaglio, F. (2005). *Lactobacillus plantarum* subsp. *argentoratensis* subsp. nov., isolated from vegetable matrices. Int. J. Syst. Evol. Microbiol., 55, 1629–1634.

Calabrò, P. S., Fazzino, F., Sidari, R., & Zema, D. A. (2020). Optimization of orange peel waste ensiling for sustainable anaerobic digestion. Renewable Energy, 154, 849–862.

Chen, F. S., Li, L., Qu, J., & Chen, C. X., (2009). Cereal vinegars made by solid-state fermentation in China. In: Solieri, L. & Giudici, P. (Eds.), Vinegar of the world (pp.243–259). Milan: Springer.

Cort´es-Di´eguez, S., Rodriguez-Solana, R., Domínguez, J. M., & Díaz, E. (2015). Impact odorants and sensory profile of young red wines from four Galician (NW of Spain) traditional cultivars. J. Inst. Brew., 12, 628–635.

De Benedictis, M., Bleve, G., Grieco, F., Tristezza, M., & Tufariello, M. (2011). An optimized procedure for the enological selection of non-Saccharomyces starter cultures. Antonie Van Leeuwenhoek, 99, 189–200.

De Filippis, F., Aponte, M., Piombino, P., Lisanti, M. T., Moio, L., Ercolini, D., & Blaiotta, G. (2019). Influence of microbial communities on the chemical and sensory features of Falanghina sweet passito wines. Food Res. Int., 120, 740–747.

De Muynck, C., Pereira, C. S., Naessens, M., Parmentier, S., Soetaert, W., & Vandamme, E. J. (2007). The genus *Gluconobacter oxydans*: Comprehensive overview of biochemistry and biotechnological applications. Crit. Rev. Biotechnol., 27, 147–171.

De-la-Fuente-Blanco, A., Sáenz-Navajas, M. P., & Ferreira, V. (2016). On the effects of higher alcohols on red wine aroma. Food Chem., 210, 107–114.

Di Mattia, C., Sacchetti, G., Seghetti, L., Piva, A., & Mastrocola, D. (2007). “Vino cotto” composition and antioxidant activity as affected by non enzymatic browning. Ital. J. Food Sci., 19, 413–424.

Duan, G., Liu, Y., Lv, H., Wu, F., & Wang, R. (2020). Optimization of “Zaoheibao” wine fermentation process and analysis of aroma substances. Biotechnol. Biotechnol. Equip., 34, 1056–1064.

Endo, A., & Okada, S. (2008). Reclassification of the genus *Leuconostoc* and proposals of *Fructobacillus fructosus* gen. nov., comb. nov., *Fructobacillus durionis* comb. nov., *Fructobacillus ficulneus* comb. nov. and *Fructobacillus pseudoficulneus* comb. nov. Int. J. Syst. Evol. Microbiol., 58, 2195–2205.

Endo, A., Futagawa-Endo, Y., & Dicks, L. M. (2009). Isolation and characterization of fructophilic lactic acid bacteria from fructose-rich niches. Syst. Appl. Microbiol., 32, 593–600.

Englezos, V., Rantsiou, K., Torchio, F., Rolle, L., Gerbi, V., & Cocolin, L. (2015). Exploitation of the non-*Saccharomyces* yeast *Starmerella bacillaris* (synonym *Candida zemplinina*) in wine fermentation: Physiological and molecular characterizations. Int. J. Food Microbiol., 199, 33–40.

Esteve-Zarzoso, B., Belloch, C., Uruburu, F., & Querol, A. (1999). Identification of yeasts by RFLP analysis of the 5.8S rRNA gene and the two ribosomal internal transcribed spacers. Int. J. Syst. Bacteriol., 1, 329–337.

Fe´as, X., Pires, J., Iglesias, A., & Estevinho, M. L. (2010). Characterization of artisanal honey produced on the Northwest of Portugal by melissopalynological and physicochemical data. Food Chem. Toxicol., 48, 3462–3470.

Guarcello, R., Gaglio, R., Todaro, A., Alfonzo, A., Schicchi, R., Cirlincione, F., … Francesca, N. (2019). Insights into the cultivable microbial ecology of “Manna” ash products extracted from Fraxinus angustifolia (Oleaceae) trees in Sicily. Italy. Frontiers in Microbiology, 10, 984.

Gullo, M., Caggia, C., De Vero, L., & Giudici, P. (2006). Characterization of acetic acid bacteria in “traditional balsamic vinegar”. Int. J. Food Microbiol., 106, 209–212.

Gustaw, K., Michalak, M., Polak-Berecka, M., & Wa´sko, A. (2018). Isolation and characterization of a new fructophilic *Lactobacillus plantarum* FPL strain from honeydew. Annals of Microbiology, 68, 459–470.

Herrera, C. M., Pozo, M. I., & Bazaga, P. (2012). Jack of all nectars, master of most: DNA methylation and the epigenetic basis of niche width in a flower-living yeast. Mol. Ecol., 21, 2602–2616.

Hohmann, S. (2002). Osmotic stress signaling and osmoadaptation in yeasts. Microbiol. Mol. Biol. Rev., 66, 300–372.

Issa-Issa, H., Noguera-Artiaga, L., Sendra, E., Pérez-López, A. J., Burló, F., Carbonell-Barrachina, ´A. A., & López-Lluch, D. (2019). Volatile composition, sensory profile, and consumers’ acceptance of Fondill´on. J. Food Qual., 1–10.

Kiss, J., & Sass-Kiss, A. (2005). Protection of originality of Tokaji Aszú: Amines and organic acids in botrytized wines by high-performance liquid chromatography. J. Agric. Food. Chem., 53, 10042–10050.

Kotseridis, Y., & Baumes, R. (2000). Identification of impact odorants in Bordeaux red grape juice, in the commercial yeast used for its fermentation, and in the produced wine. J. Agric. Food. Chem., 48, 400–406.

Kurtzman, C., Fell, J. W., & Boekhout, T. (Eds.). (2011). The yeasts: a taxonomic study. Elsevier.

Kurtzman, C. P., & Robnett, C. J. (1998). Identification and phylogeny of ascomycetous yeasts from analysis of nuclear large subunit (26S) ribosomal DNA partial sequences. Antonie Van Leeuwenhoek, 73, 331–371.

Lemos, W. J., Bovo, B., Nadai, C., Crosato, G., Carlot, M., Favaron, F., … Corich, V. (2016). Biocontrol ability and action mechanism of *Starmerella bacillaris* (synonym *Candida zemplinina*) isolated from wine

musts against gray mold disease agent *Botrytis cinerea* on grape and their effects on alcoholic fermentation. Front. Microbiol., 7, 1249.

Lewis, W. R., & Quackenbush, F. W. (1949). The use of the polarograph to distinguish between the peroxide structures in oxidized fats. J. Am. Oil. Chem. Soc., 26, 53–57.

Lievens, B., Hallsworth, J. E., Pozo, M. I., Belgacem, Z. B., Stevenson, A., Willems, K. A., & Jacquemyn, H. (2015). Microbiology of sugar-rich environments: Diversity, ecology and system constraints. Environ. Microbiol., 17, 278–298.

Loizzo, M. R., Pugliese, A., Bonesi, M., De Luca, D., O'Brien, N., Menichini, F., & Tundis, R. (2013). Influence of drying and cooking process on the phytochemical content, antioxidant and hypoglycaemic properties of two bell *Capsicum annum* L. cultivars. Food Chem. Toxicol., 53, 392–401.

Macauley, S., McNeil, B., & Harvey, L. M. (2001). The genus *Gluconobacter* and its applications in biotechnology. Crit. Rev. Biotechnol., 21, 125.

Magyar, I., & T´oth, T. (2011). Comparative evaluation of some oenological properties in wine strains of *Candida stellata*, *Candida zemplinina*, *Saccharomyces uvarum* and *Saccharomyces cerevisiae*. Food Microbiol., 28, 94–100.

Mas, A., Torija, M. J., García-Parrilla, M., & Troncoso, A. M. (2014). Acetic acid bacteria and the production and quality of wine vinegar. The Scientific World Journal, 394671.

Masneuf-Pomarede, I., Juquin, E., Miot-Sertier, C., Renault, P., Laizet, Y. H., Salin, F., … Albertin, W. (2015). The yeast *Starmerella bacillaris* (synonym *Candida zemplinina*) shows high genetic diversity in winemaking environments. FEMS Yeast Res., 15, fov045.

Moreno-García, J., Raposo, R. M., & Moreno, J. (2013). Biological aging status characterization of Sherry type wines using statistical and oenological criteria. Food Res. Int., 54, 285–292.

Nogueira, J. M. F., & Nascimento, A. M. D. (1999). Analytical characterization of Madeira wine. J. Agric. Food. Chem., 47, 566–575.

Peinado, R. A., Moreno, J., Bueno, J. E., Moreno, J. A., & Mauricio, J. C. (2004). Comparative study of aromatic compounds in two young white wines subjected to pre-fermentative cryomaceration. Food Chem., 84, 585–590.

Piva, A., Di Mattia, C., Neri, L., Dimitri, G., Chiarini, M., & Sacchetti, G. (2008). Heatinduced chemical, physical and functional changes during grape must cooking. Food Chem., 106, 1057–1065.

Repubblica Italiana. (2000) Elenco nazionale dei prodotti agroalimentari tradizionali. Gazz. Uff. 194 (21.08.2000): S.O.

Repubblica Italiana. (2003). Terza revisione dell'elenco nazionale dei prodotti agroalimentari tradizionali. Gazz. Uff. 200 (29.08.2003): S.O.

Schreier, P. (1980). Wine aroma composition: Identification of additional volatile constituents of red wine. J. Agric. Food. Chem., 28, 926–928.

Shigeto, A., Wada, A., & Kumazawa, K. (2020). Identification of the novel odor active compounds "p-menthane lactones" responsible for the characteristic aroma of fresh peppermint leaf. Biosci. Biotechnol. Biochem., 84, 421–427.

Sinacori, M., Francesca, N., Alfonzo, A., Cruciata, M., Sannino, C., Settanni, L., & Moschetti, G. (2014). Cultivable microorganisms associated with honeys of different geographical and botanical origin. Food Microbiol., 38, 284–294.

Snowdon, J. A., & Cliver, D. O. (1996). Microorganisms in honey. Int. J. Food Microbiol., 31, 1–26.

Solieri, L., & Giudici, P. (2009). Vinegars of the world. In: Solieri L, Giudici P (Eds), Vinegars of the world (pp 1–14). Milan: Springer.

Solieri, L., & Giudici, P. (2008). Yeasts associated to traditional balsamic vinegar: Ecological and technological features. Int. J. Food Microbiol., 125, 36–45.

Solieri, L., Landi, S., De Vero, L., & Giudici, P. (2006). Molecular assessment of yeast population from traditional balsamic vinegar. J. Appl. Microbiol., 101, 63–71.

Spano, G., & Massa, S. (2006). Environmental stress response in wine lactic acid bacteria: Beyond Bacillus subtilis. Crit. Rev. Microbiol., 32, 77–86.

Steinkraus, K. H. (2002). Fermentations in world food processing. Compr. Rev. Food Sci. Food Saf., 1, 23–32.

Tăsev, K., Stefova, M., & Ivanova, V. (2016). HPLC method validation and application for organic acid analysis in wine after solid-phase extraction. Maced. J. Chem. Chem. Eng., 35, 225–233.

Thomé, P. E. (2007). Cell wall involvement in the glycerol response to high osmolarity in the halotolerant yeast *Debaryomyces hansenii*. Antonie Van Leeuwenhoek, 91, 229–235.

Tofalo, R., Chaves, Lopez C., Di Fabio, F., Schirone, M., Felis, G. E., Torriani, S., … Suzzi, G. (2009). Molecular identification and osmotolerant profile of wine yeasts that ferment a high sugar grape must. Int. J. Food Microbiol., 130, 179–187.

Tofalo, R., Patrignani, F., Lanciotti, R., Perpetuini, G., Schirone, M., Di Gianvito, P., … Suzzi, G. (2016). Aroma profile of Montepulciano d'Abruzzo wine fermented by single and co-culture starters of autochthonous *Saccharomyces* and non-*Saccharomyces* yeasts. Front. Microbiol., 7, 610.

Tofalo, R., Schirone, M., Torriani, S., Rantsiou, K., Cocolin, L., Perpetuini, G., & Suzzi, G. (2012). Diversity of *Candida zemplinina* strains from grapes and Italian wines. Food Microbiology, 29, 18–26.

Torriani, S., Felis, G. E., & Dellaglio, F. (2001). Differentiation of *Lactobacillus plantarum*, *L. pentosus*, and *L. paraplantarum* by recA gene sequence analysis and multiplex PCR assay with recA gene-derived primers. Appl. Environ. Microbiol., 67, 3450–3454.

Ugliano, M., & Henschke, P. A. (2009). Yeasts and wine flavour. In Moreno-Arribas, M. V. & Polo, C. (Eds.) Wine Chemistry and Biochemistry (pp. 313-392). New York: Springer.

Wade, M. E., Strickland, M. T., Osborne, J. P., & Edwards, C. G. (2019). Role of *Pediococcus* in winemaking. Aust. J. Grape Wine Res., 25, 7–24.

Wu, J. J., Ma, Y. K., Zhang, F. F., & Chen, F. S. (2012). Biodiversity of yeasts, lactic acid bacteria and acetic acid bacteria in the fermentation of “Shanxi aged vinegar”, a traditional Chinese vinegar. Food Microbiol., 30, 289–297.

Xia, T., Zhang, B., Duan, W., Zhang, J., & Wang, M. (2020). Nutrients and bioactive components from vinegar: A fermented and functional food. J. Funct. Foods, 64, Article 103681.